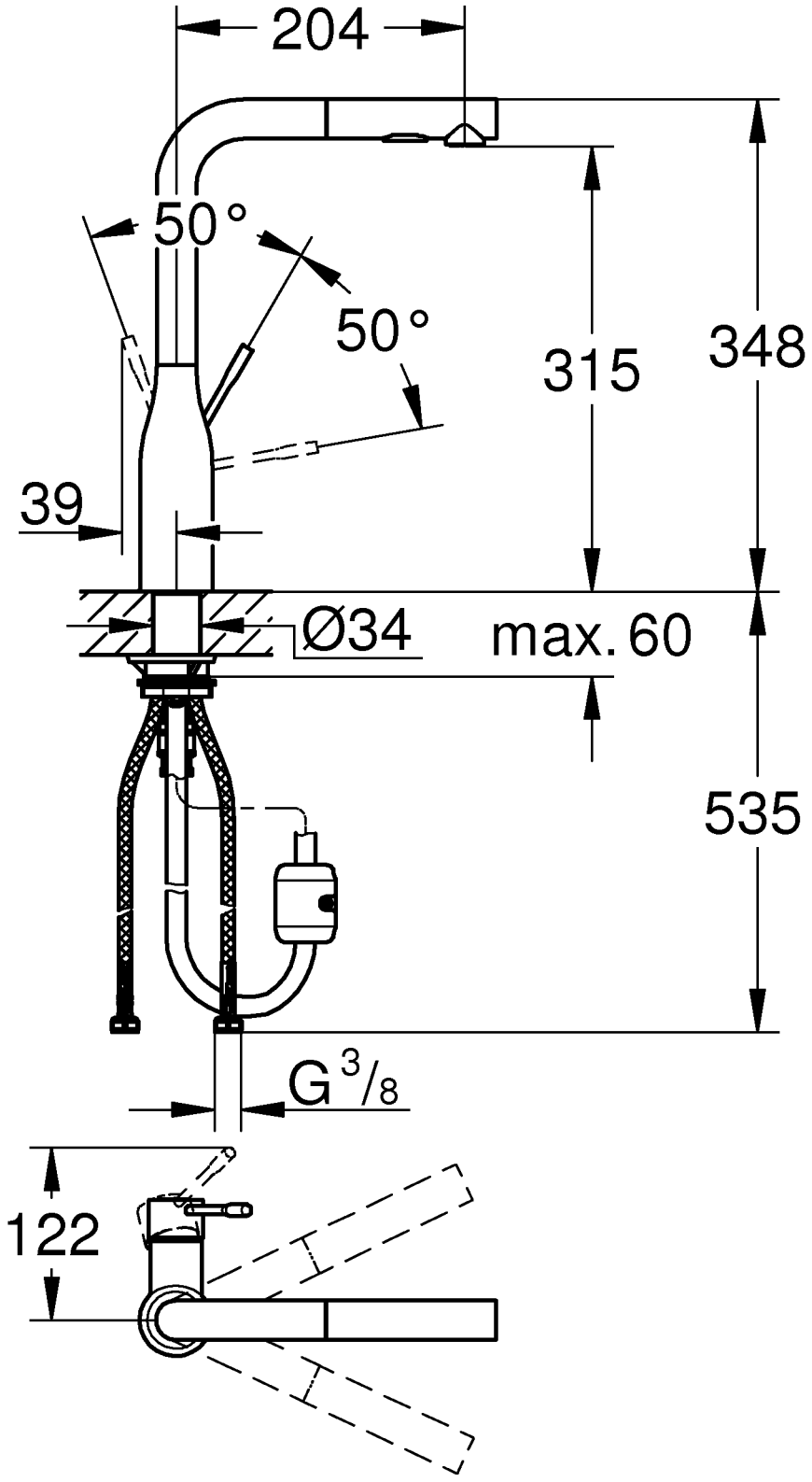
204
50°
50°
315
348
39
Ø34
max. 60
535
G 3/8
122