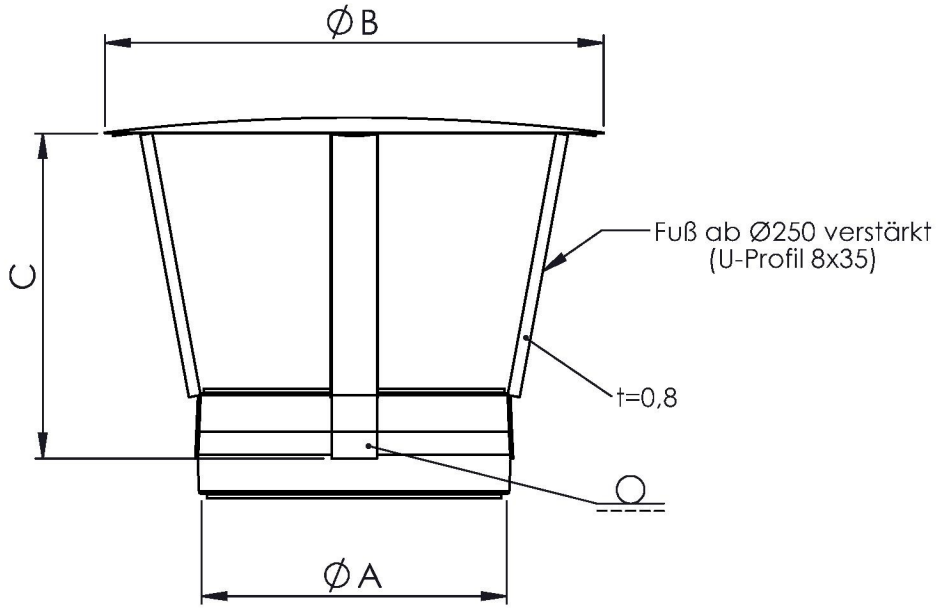

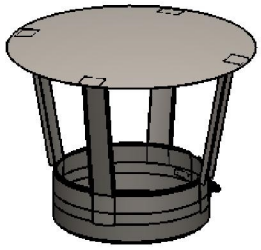

(1:10)

Ø					0130		0150	0160	0180									
A					180		200	210	230									
B					300		360	360	410									
C					175		215	220	240									
t	0,5																	
kg					0,7		0,8	0,9	1,0									

material: inside/outside	304	surface: inside/outside	shiny
weight:		revisions-no.	A1

jeremias®

					date	name
				drawn	15.09.2011	F. Steingruber
				checked		
				appr.		
1	21.11.2011	FS				
revision	date	name				

description: DW-EC (2.0) 33 Rain cap

code

drawing-no.

A4

scale: 1:5

sheet 1 of 1