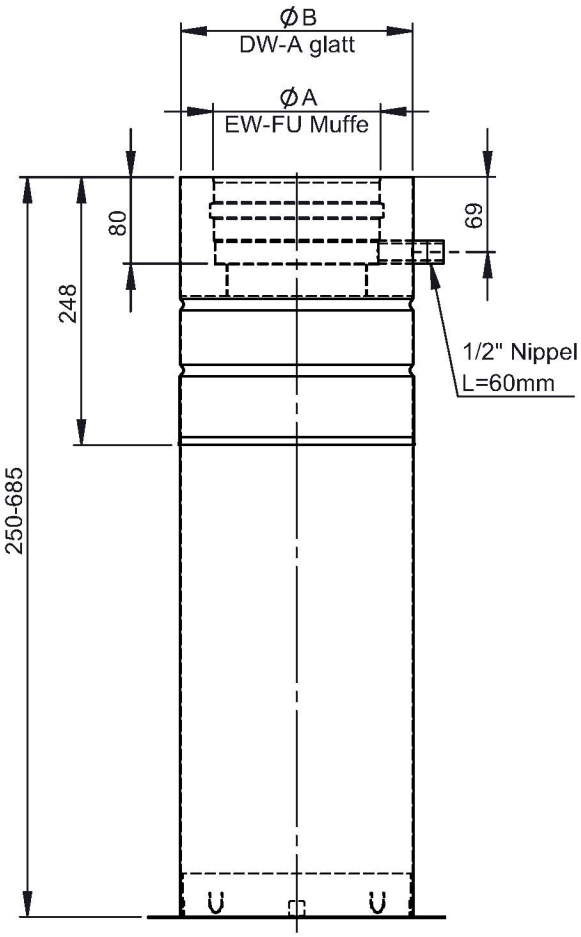

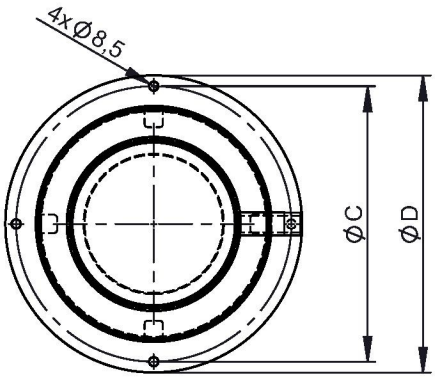

M 1:10 (Ø150)

inkl. Systemklemmband

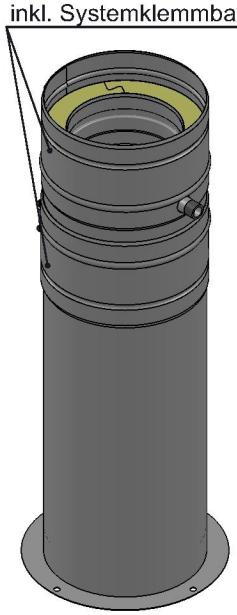

Ø							130		150	160	180										
A							130		150	160	180										
B							195		215	225	245										
C							235		255	265	285										
D							255		275	285	305										
kg							5,1		5,73	6,06	6,72										

notes:

DIN ISO 13920 Tolerances B

revisions-no. A1 | mm / kg

	date	name
drawn by	02.02.2021	JLA
checked by		
approved by		
modified by		

jeremias® CHIMNEY SYSTEMS

description: Teleskopstütze 250-690mm, inkl. Teleskopkopf mit Kondensatablauf seitlich Nippel 1/2" l=60mm und runder Grundplatte, inkl. Klemmband

code: **DW03**

drawing-no.: **01-02-20-1161-000**

scale: 1:7

format: A4

sheet: 1 of 1

© jeremias GmbH. All rights reserved, also regarding any disposal, exploitation, editing, distribution, as well as in the event of applications for industrial property rights.