Possible type of female part "FU"

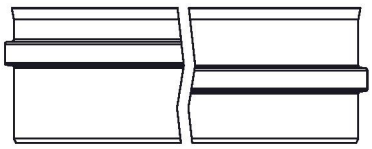

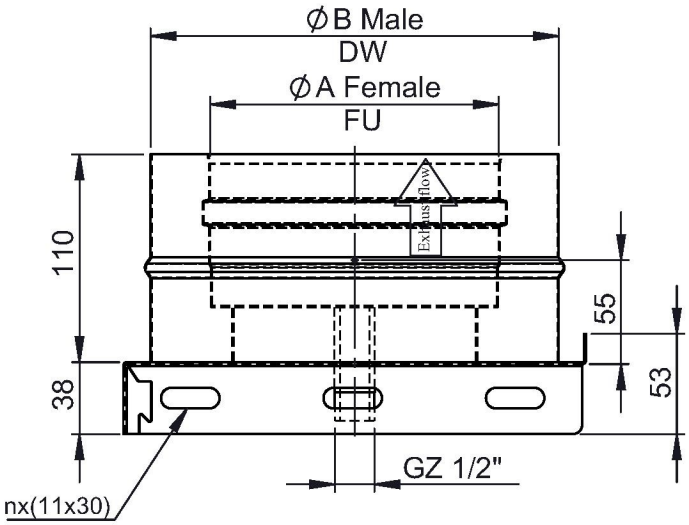

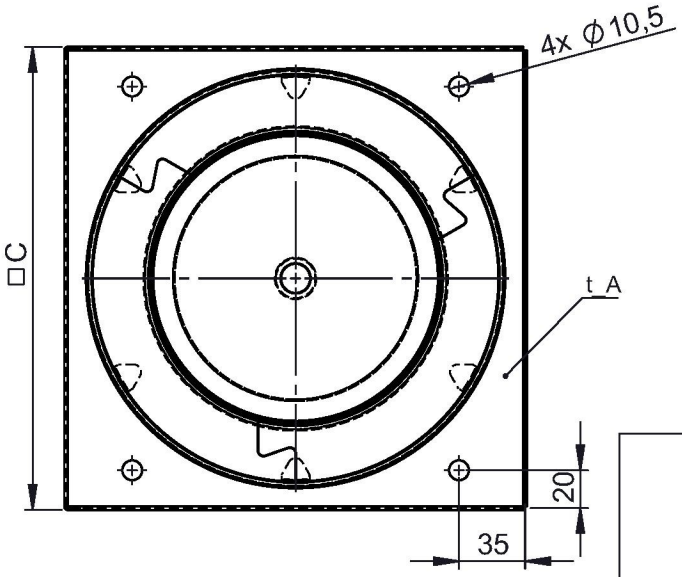

150 (1:5)

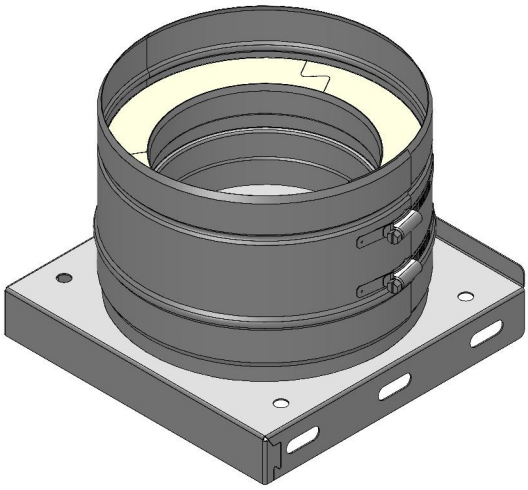

Ø							130		150	160	180										
A							130		150	160	180										
B							195		215	225	245										
□C							225		245	255	275										
t_A	1																				
n	3																				
kg							1,61		2,22	1,99	2,25										

notes:
ENCD

DIN ISO 13920 Tolerances B

revisions-no. 05

mm / kg

	date	name
drawn by	04.03.24	PMA
checked by	04.03.24	JAD
approved by	04.03.24	JWY
modified by	05.08.24	PMA

jeremias® CHIMNEY SYSTEMS

description: Base plate with condensate outlet at bottom

code: DW05Ø

drawing-no.: 02-20-1092-000

scale: 1:5

format: A4

sheet: 1 of 1

© jeremias GmbH. All rights reserved, also regarding any disposal, exploitation, editing, distribution, as well as in the event of applications for industrial property rights.