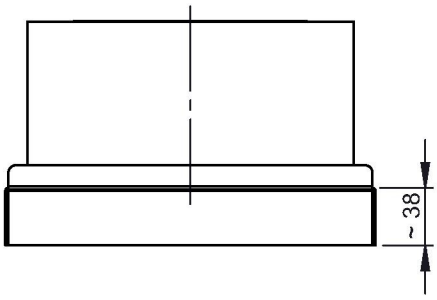

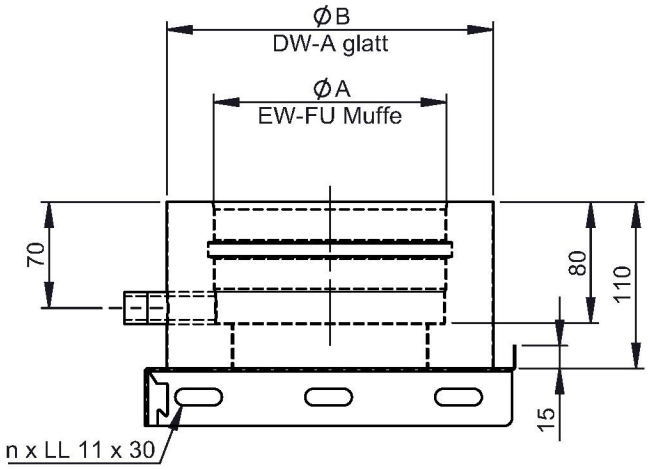

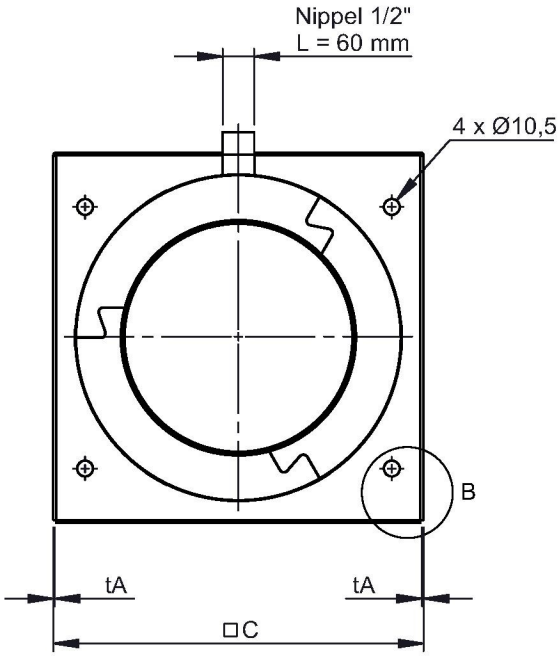

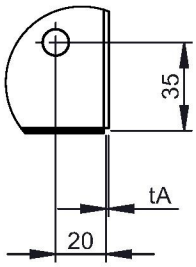

DETAILB (1 : 3)

M 1:8 (Ø150)

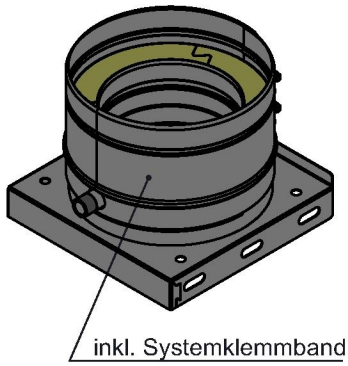

Ø							**130**		**150**	**160**	**180**											
A							130		150	160	180											
B							195		215	225	245											
C							225		245	255	275											
n	3																					
t_i/t_a	0,6 / 0,6																					
tA	1																					
kg							1,92		21,9	2,32	2,61											

notes:

DIN ISO 13920 Tolerances B

revisions-no. A1 | mm / kg

	date	name
drawn by	26.11.2018	SME
checked by		
approved by		
modified by	16.10.2019	SME

jeremias® CHIMNEY SYSTEMS

description: Grundplatte mit Kondensatablauf seitlich, mit Nippel 1/2" l=60mm, inkl. Klemmband

code: **DW06**

drawing-no.: **01-02-20-1057-000**

scale: 1:5

format: A4

sheet: 1 of 1

© jeremias GmbH. All rights reserved, also regarding any disposal, exploitation, editing, distribution, as well as in the event of applications for industrial property rights.