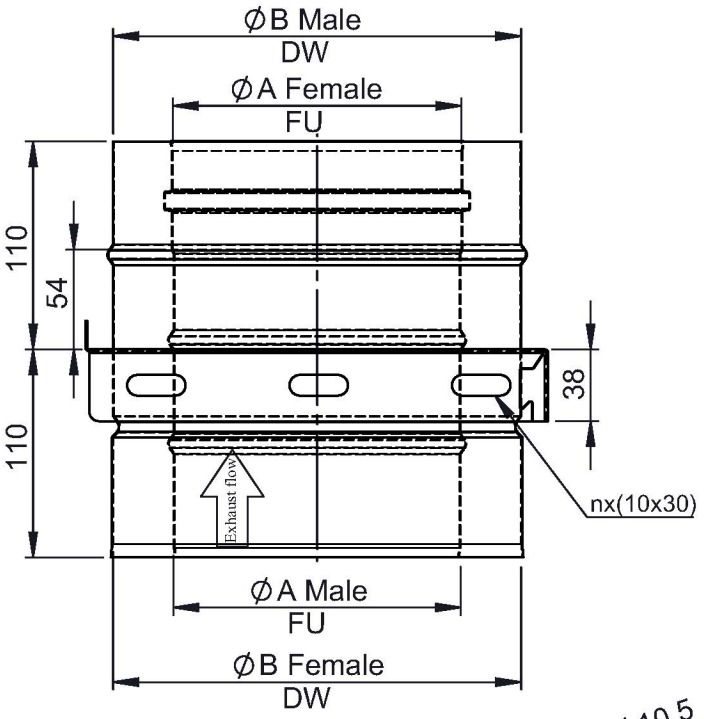

Possible type of female part "FU"

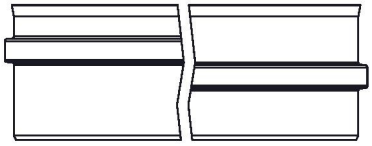

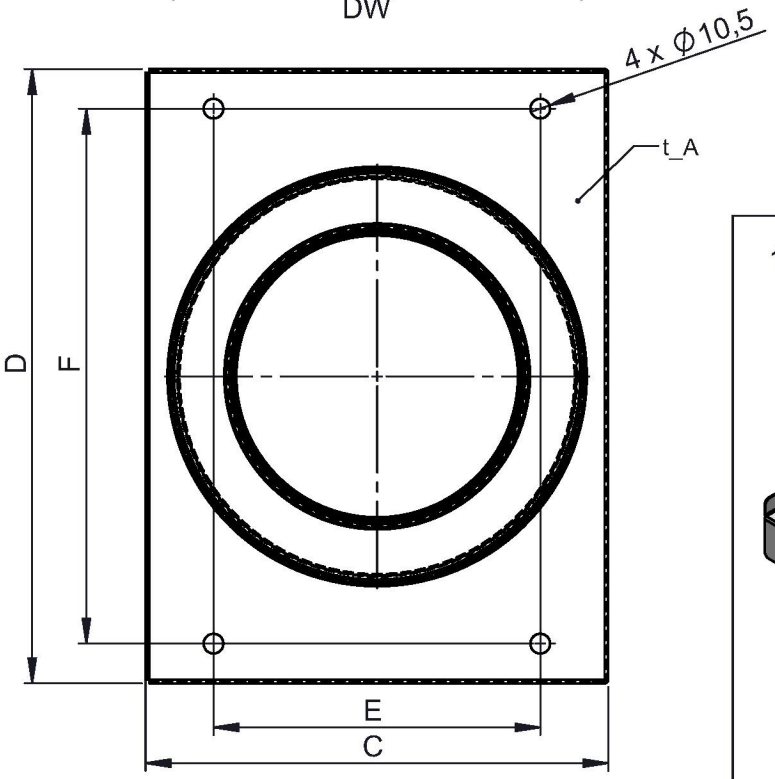

1:5 (Ø150)

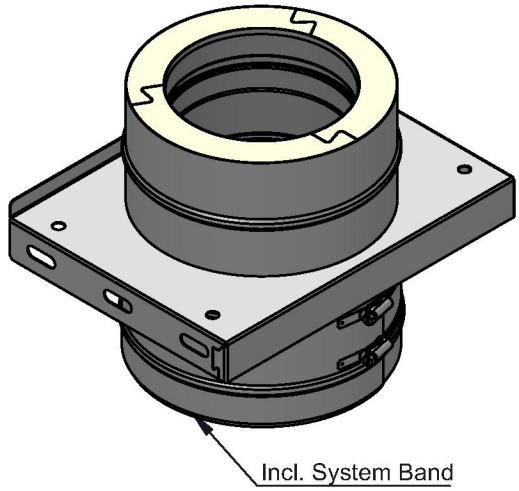

Ø							130		150	160	180
A							130		150	160	180
B							195		215	225	245
C							225		245	255	275
D							305		325	335	355
E							153		173	183	203
F							263		283	293	313
t_A	1										
n	3										
kg							2,08		2,33	2,45	2,7

notes:
ENCD

DIN ISO 13920 Tolerances B

revisions-no. 04 | mm / kg

	date	name
drawn by	29.09.20	JAD
checked by	29.09.20	SWA
approved by	29.09.20	JWY
modified by	31.07.23	PMA

jeremias® CHIMNEY SYSTEMS

description: Base plate for intermediate support

code: DW07

drawing-no.: 02-20-1055-000

scale: 1:5

format: A4

sheet: 1 of 1

© jeremias GmbH. All rights reserved, also regarding any disposal, exploitation, editing, distribution, as well as in the event of applications for industrial property rights.