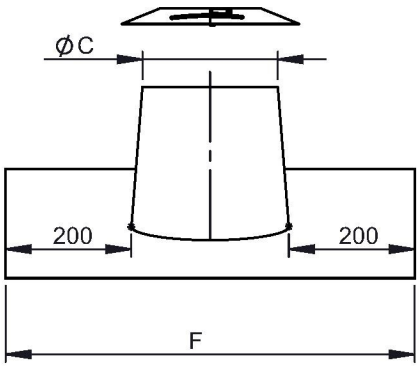

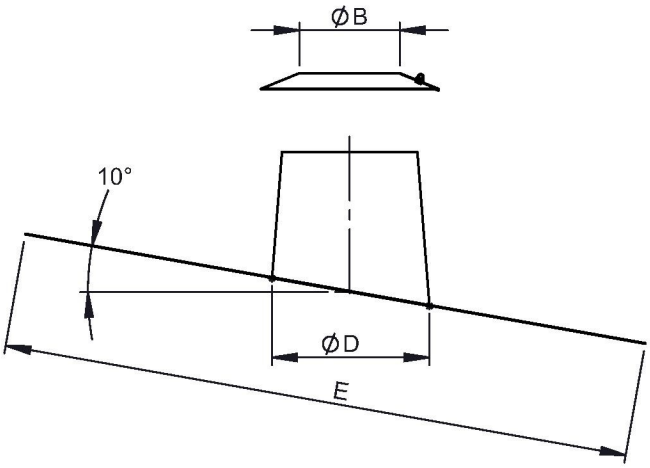

mögliche Materiallösungen	
WGR	**Material**
2R2-ZUAC52I Ø	**Kegel:** 1.4301(304)-2R(IIID)
	Platte: 2.3202 (Pb)
	Wetterkragen:1.4301(304)-2R(IIID)
2B2-ZUAC53I Ø	**Kegel:** 1.4301(304)-2B(IIIC)
	Platte: 2.3202 (Pb)
	Wetterkragen: 1.4301(304)-2B(IIIC)
2J2-ZUAC53I Ø	**Kegel:** 1.4301(304)-2J(GEB)
	Platte: 2.3202 (Pb)
	Wetterkragen: 1.4301(304)-2J(GEB)
CU-ZUAC53I Ø	**Kegel:**2.0090(SFCU)
	Platte: 2.3202 (Pb)
	Wetterkragen:2.0090(SFCU)
VZ-ZUAC53I Ø	**Kegel:**1.0226(DX51D)-VZ(VZ)
	Platte: 2.3202 (Pb)
	Wetterkragen:1.0226(DX51D)-VZ(VZ)

Ø - System-Außendurchmesser
(gilt für doppelwandige Systeme)

M 1:20 (Ø150)

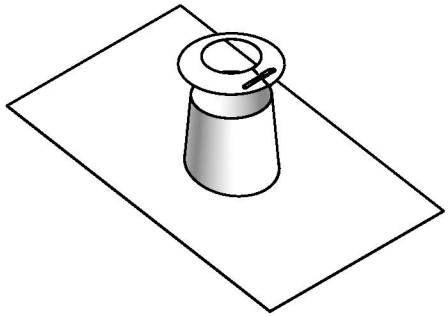

Ø																		**180**			**195**	**200**
ØB																		180			195	200
ØC																		240				265
ØD																		275				300
E	1000																					
F																		675				700
kg																		7,64				7,89

Ø		**210**	**215**		**225**	**230**			**245**
ØB		210	215		225	230			245
ØC	265				290				
ØD	300				325				
E									
F	700				725				
kg	7,89				8,12				
Ø									
ØB									
ØC									
ØD									
E									
F									
kg									

notes:

DIN ISO 13920 Tolerances B

revisions-no. A

mm / kg

	date	name
drawn by	24.02.2021	TRA
checked by		
approved by		
modified by		

jeremias® CHIMNEY SYSTEMS

description: Dachdurchführung 5-15° mit Bleirand und Wetterkragen

code: **WGR-ZUAC53**

drawing-no. **01-07-04-5320-000**

scale 1:12

format A4

sheet 1 of 1

© jeremias GmbH. All rights reserved, also regarding any disposal, exploitation, editing, distribution, as well as in the event of applications for industrial property rights.