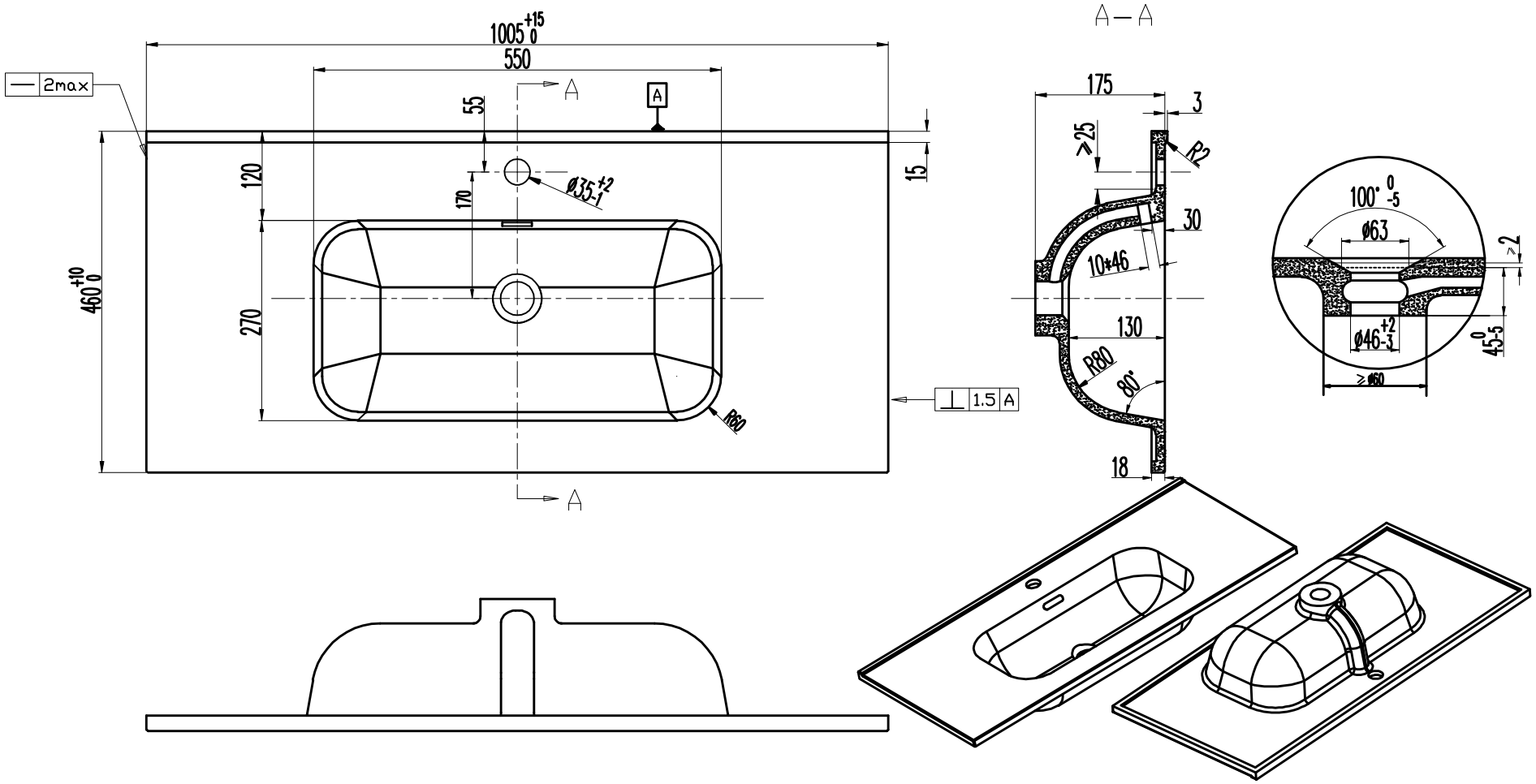

50200	
1005*460*175	