US 50 B/ 60 B Varianto (Blocktype)
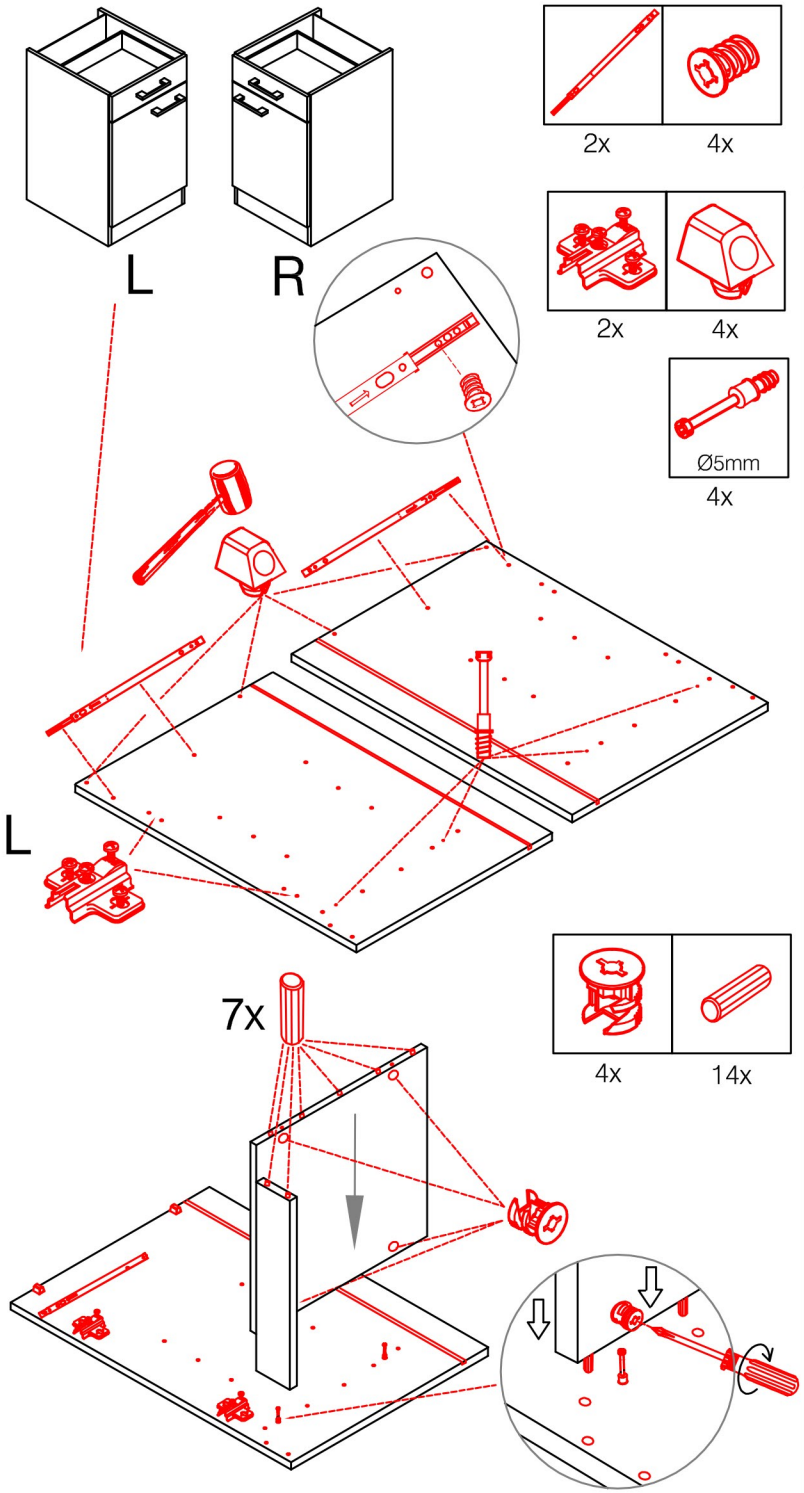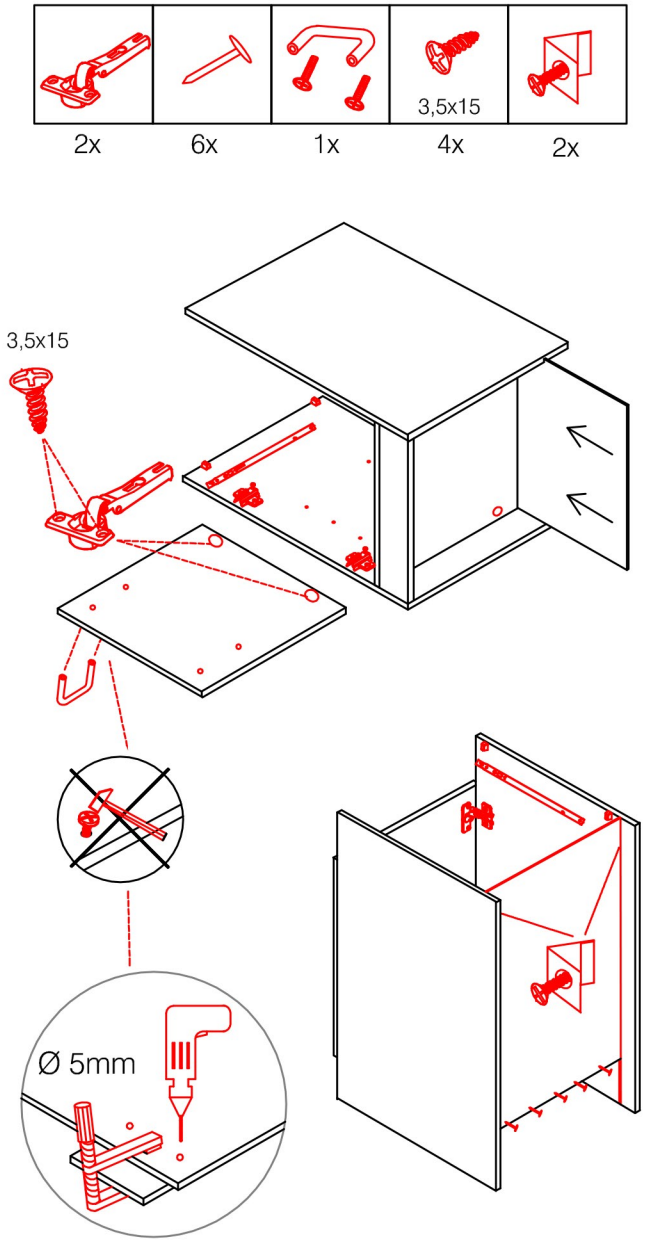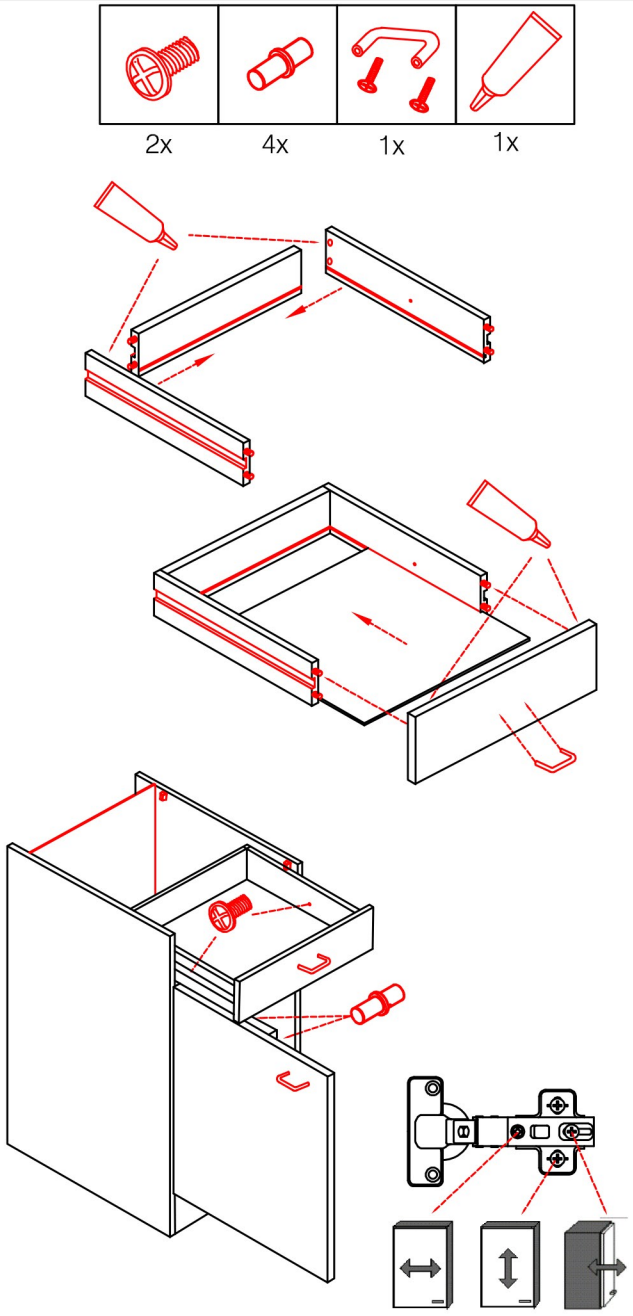
Montageanleitung / Notice de montage / Assembly instruction