A

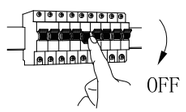

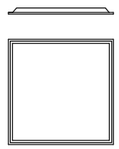

Art.-Nr.	L*W*H(mm)
902212	595*595*34
902213	620*620*34
902357	595*595*34
902358	620*620*34
300726	595*595*34
300727	595*595*34

B

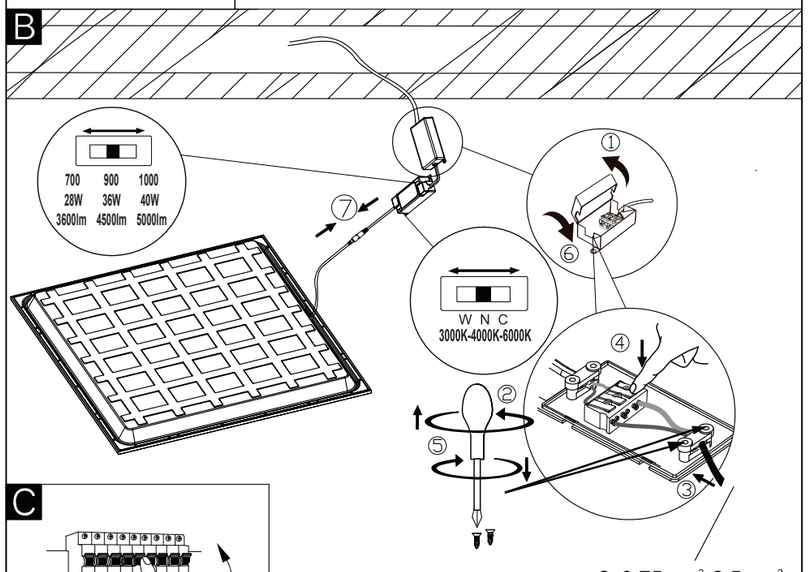

C

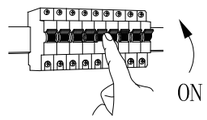

902212, 902213
902357, 902358
300726, 300727

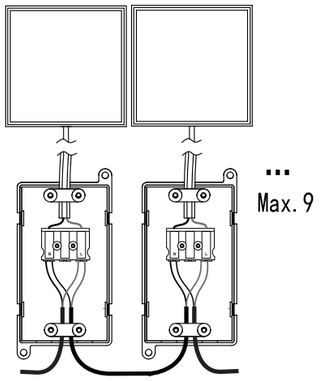

⑧

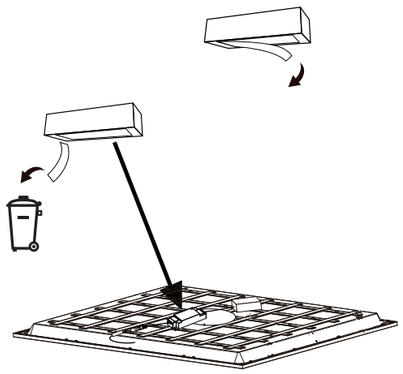

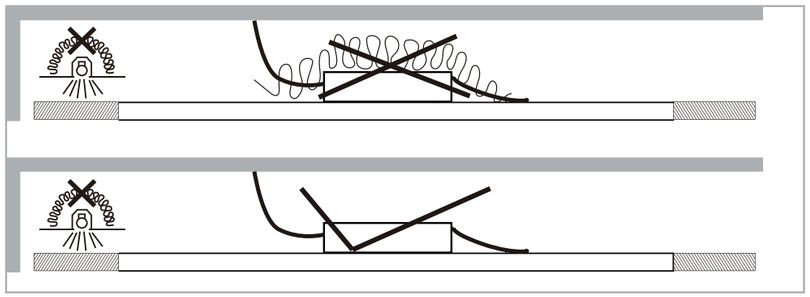

A Recessed Ceiling Mount

902212, 902357, 300726, 300727: 59.5x59.5cm
902213, 902358: 62x62cm

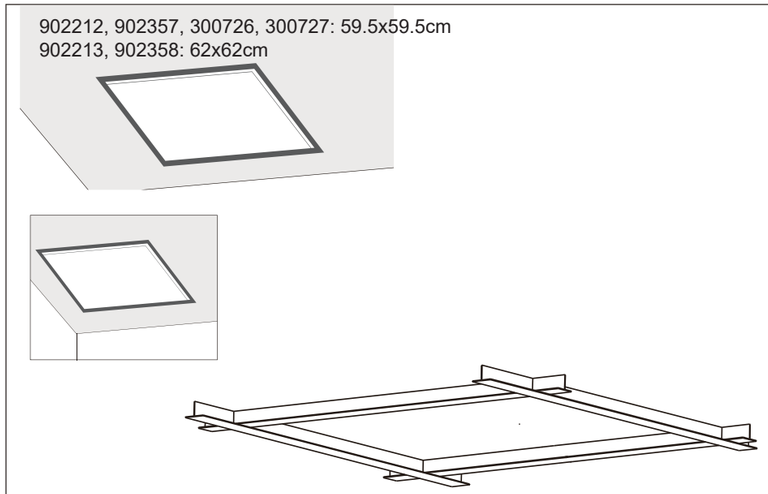

902212, 902212, 902357, 902358, 300726, 300727

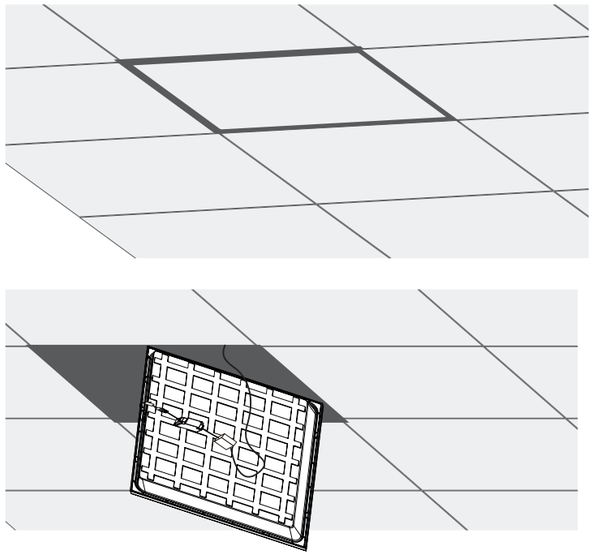

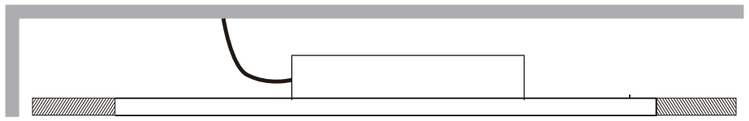

B Hanging Mount

902212, 902357, 300726, 300727: 59.5x59.5cm
902213, 902358: 62x62cm

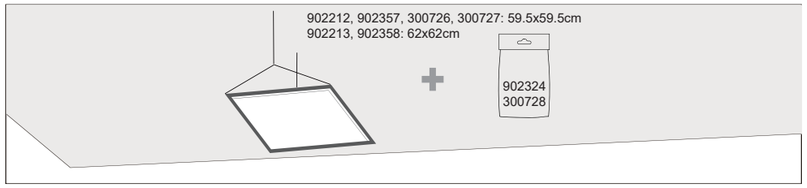

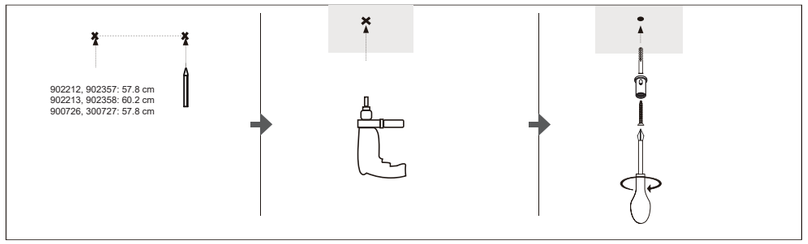

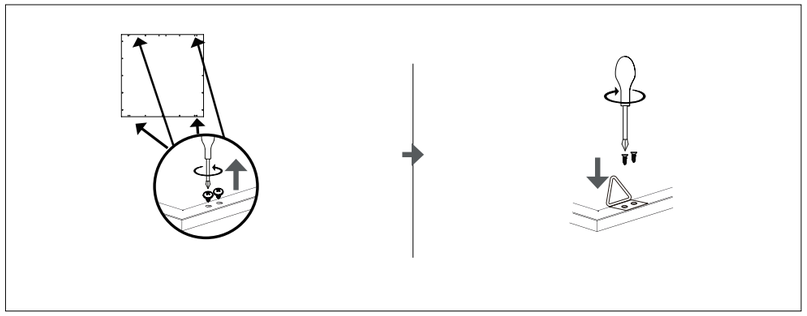

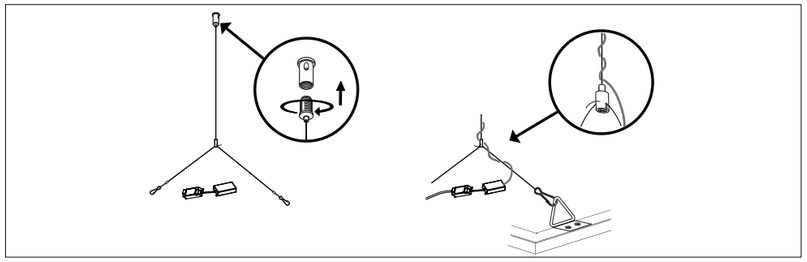

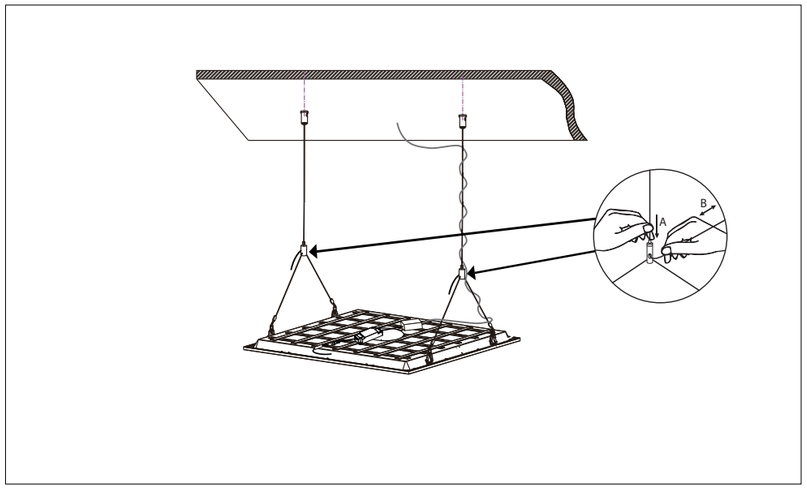

www.eglo.com

Here you can find gross
and net lumen + LDT data