PHILIPS

hue

Turaco
Pedestal
Post



iA

User manual
Benutzerhandbuch
Notice d’emploi
Manual de usuario
Manual do usuário
Manuale d'uso

Incl.

iA

iB

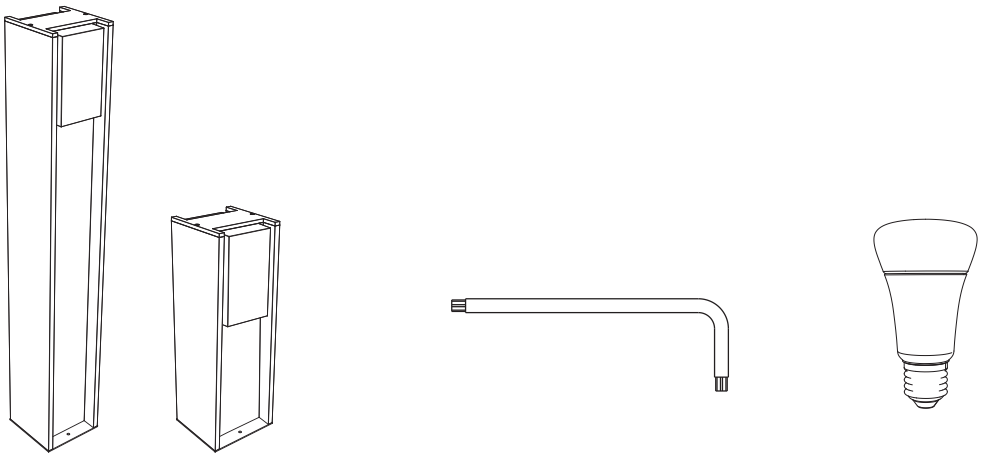

Excl.

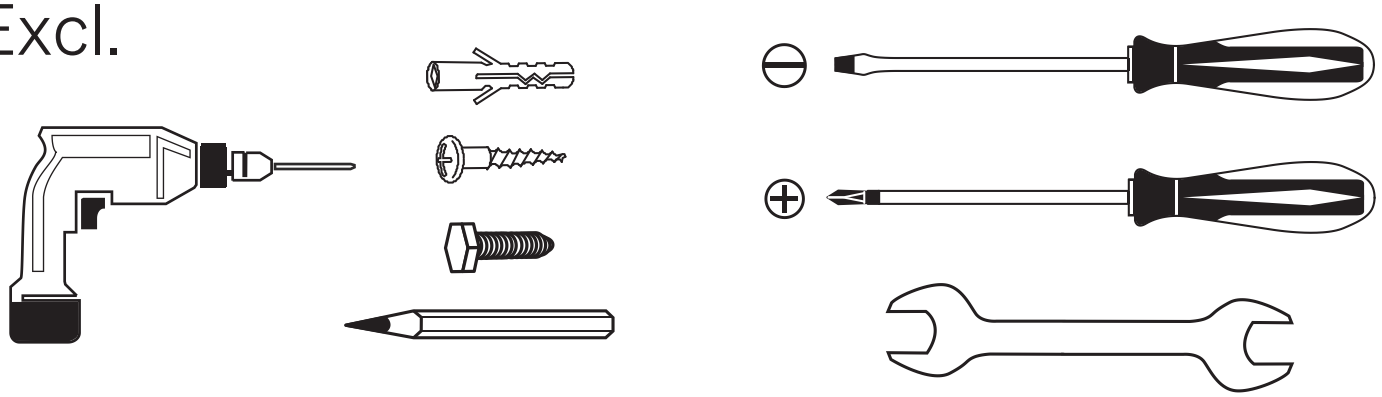

iB

IP44

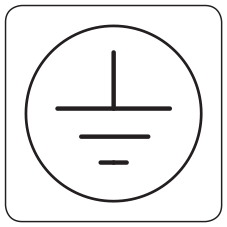

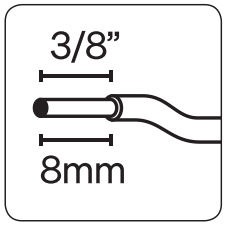





MAX. 9.5 W

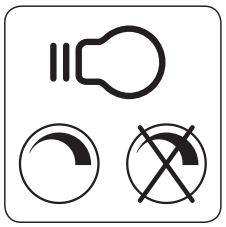





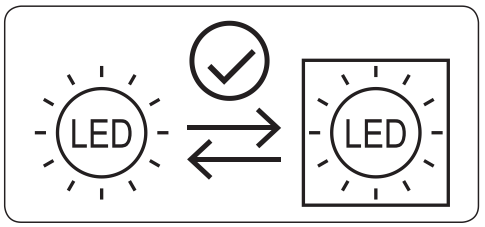

D

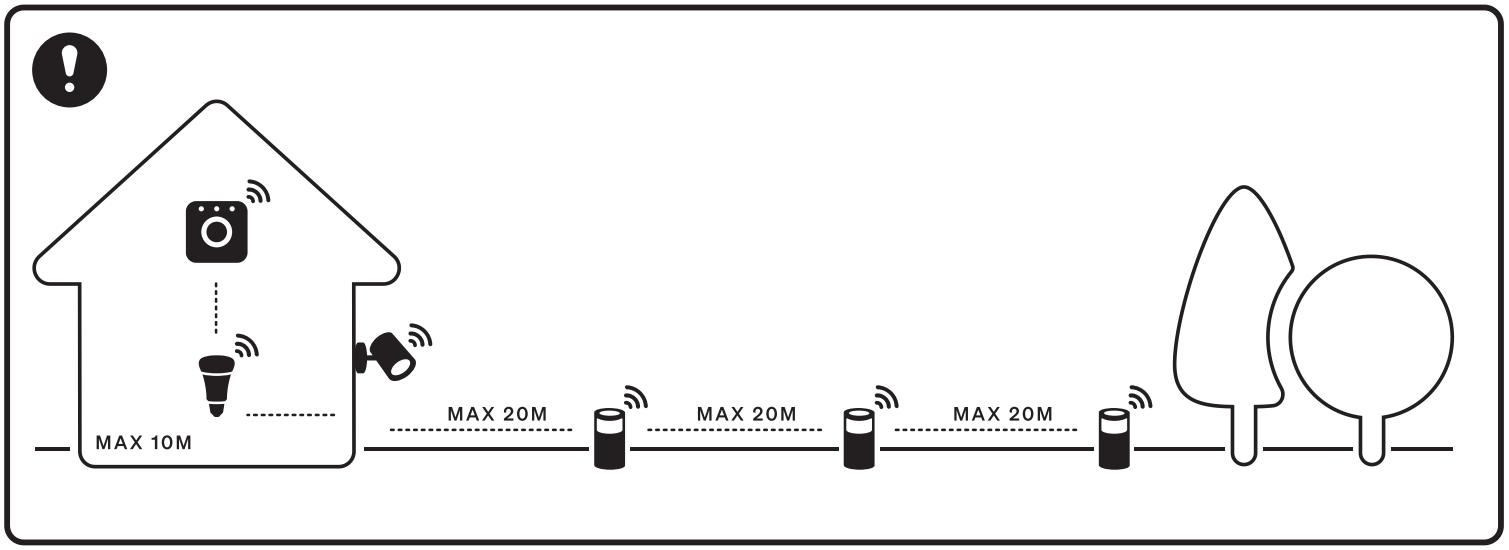
MAX 10M
MAX 20M
MAX 20M
MAX 20M

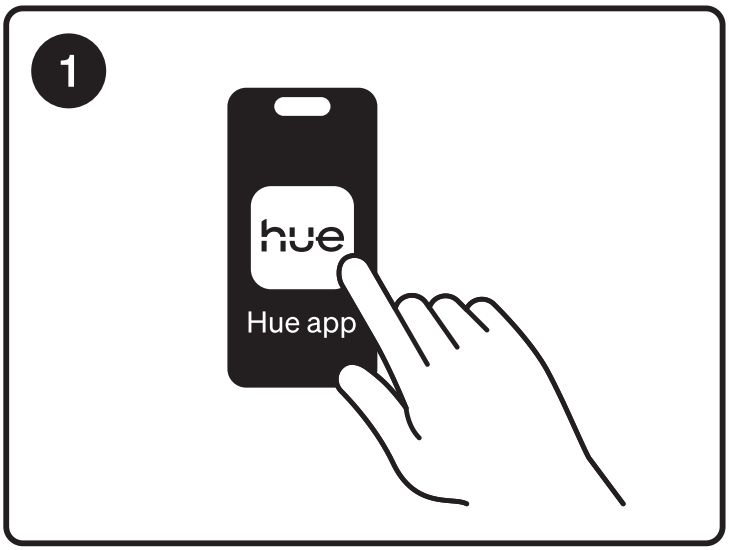
1
hue
Hue app

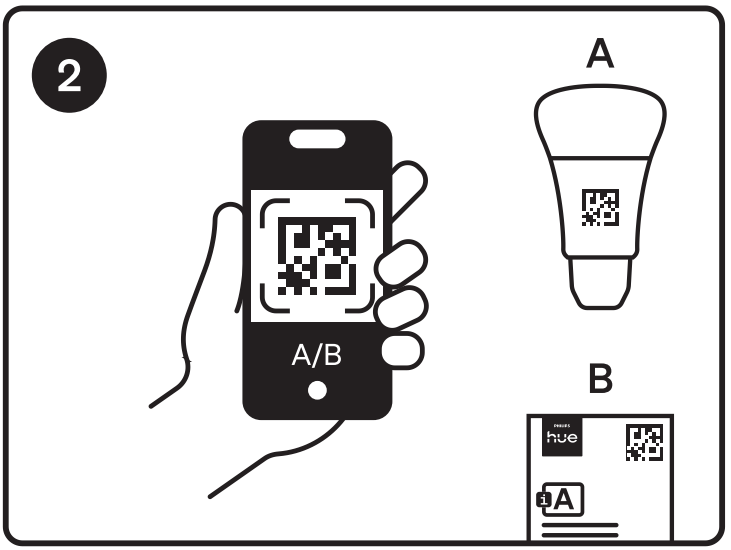
2
A
A/B
B
hue
A

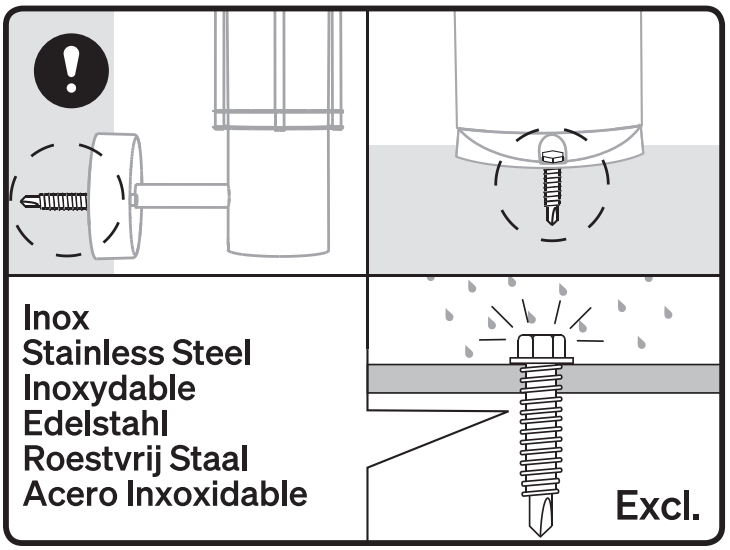
Inox
Stainless Steel
Inoxydable
Edelstahl
Roestvrij Staal
Acero Inxoxidable
Excl.

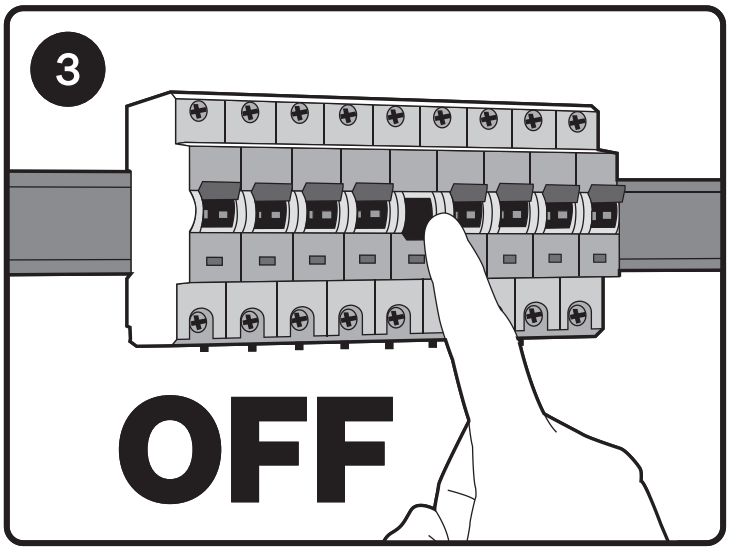
3
OFF

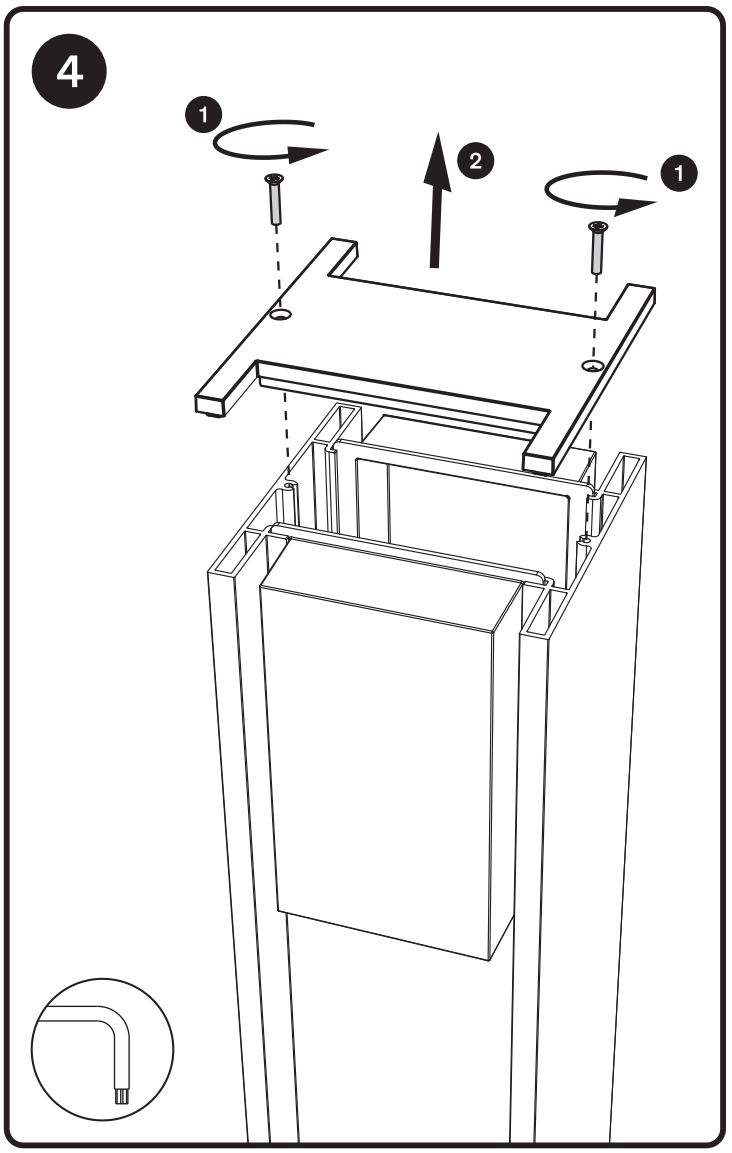
4
1
2
1

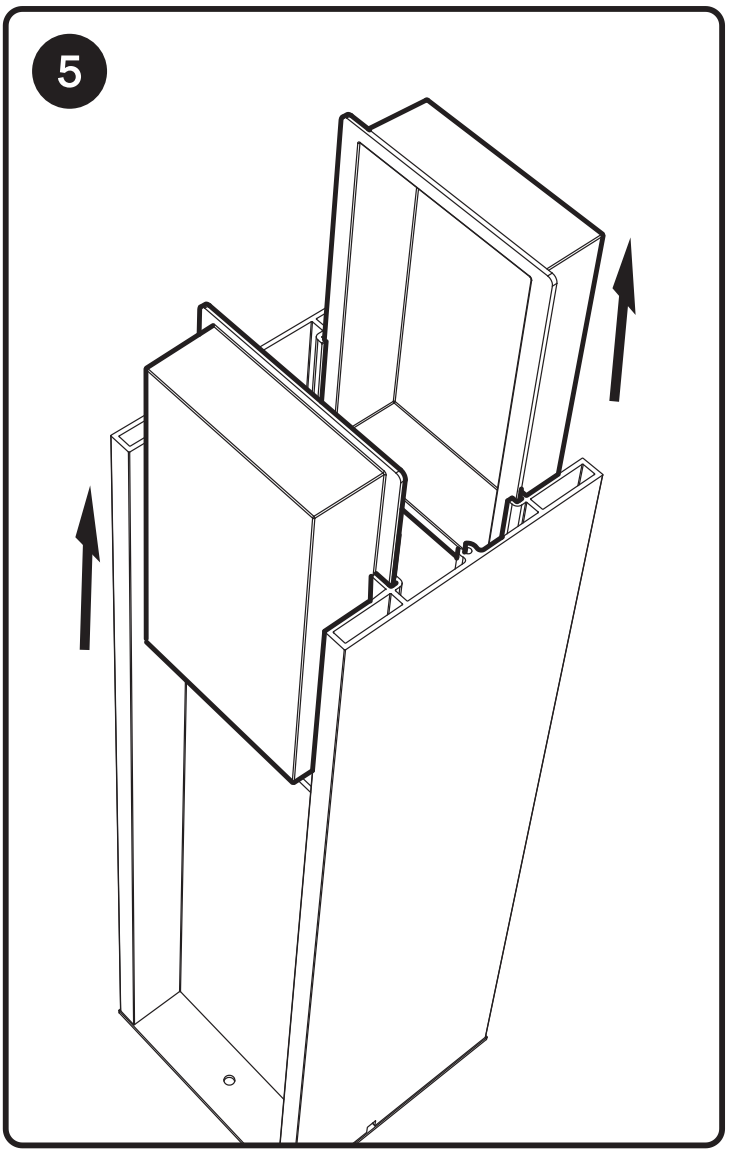
5

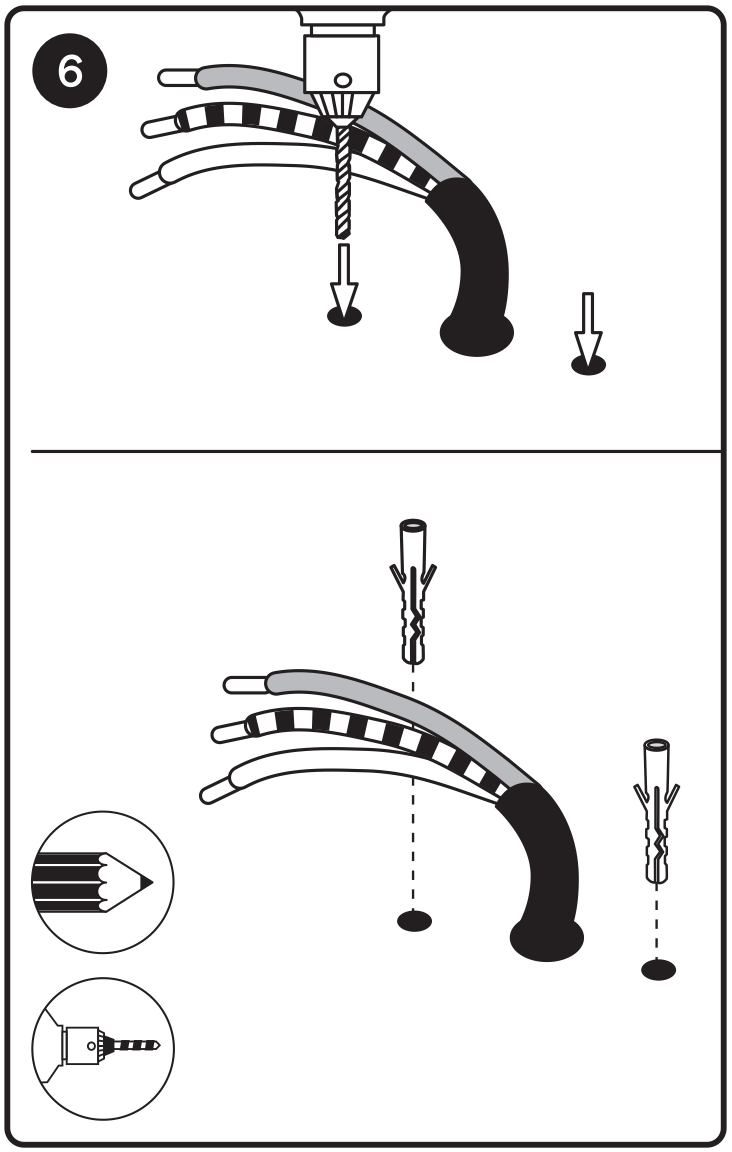
6

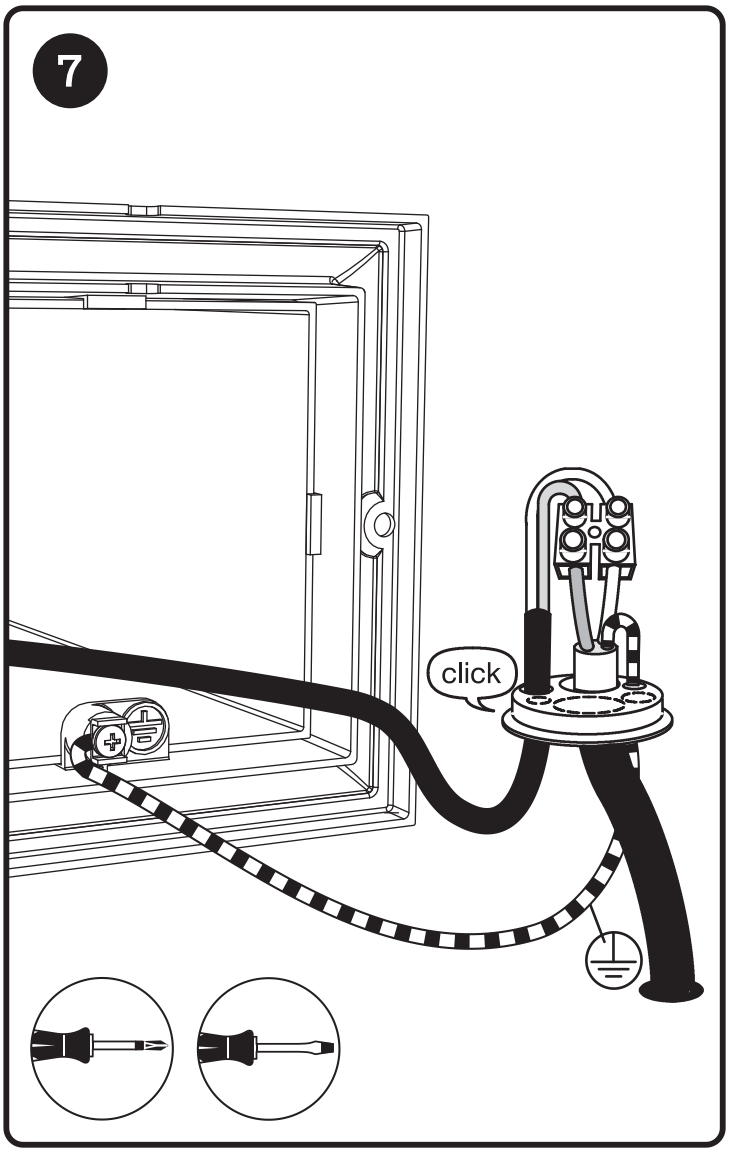
7
click

8

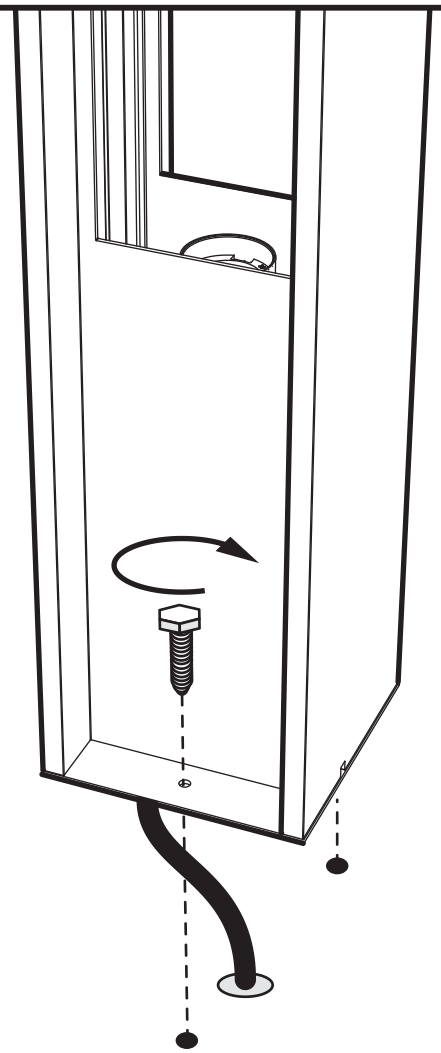

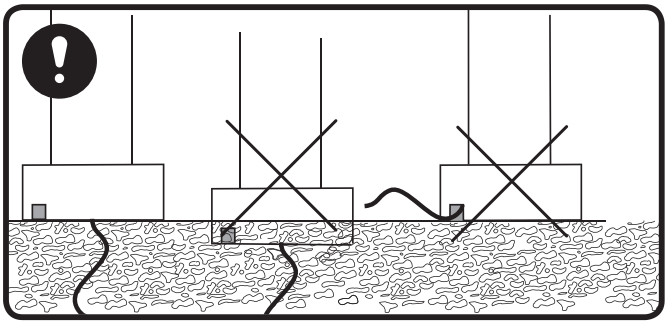

9

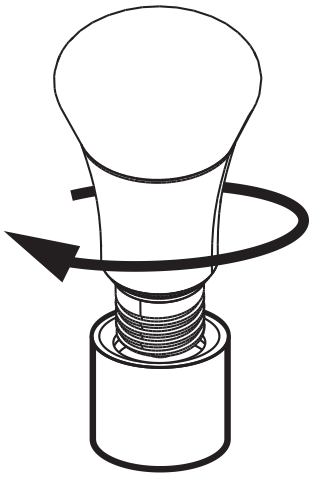

10

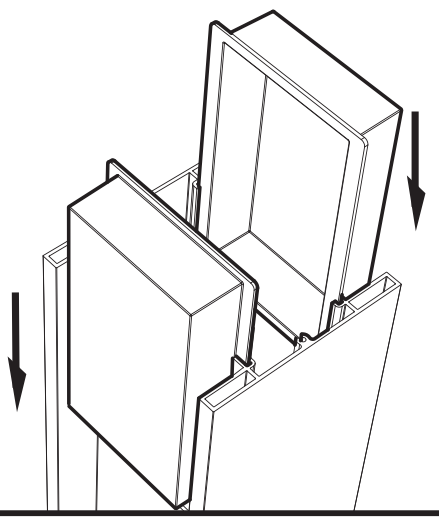

11

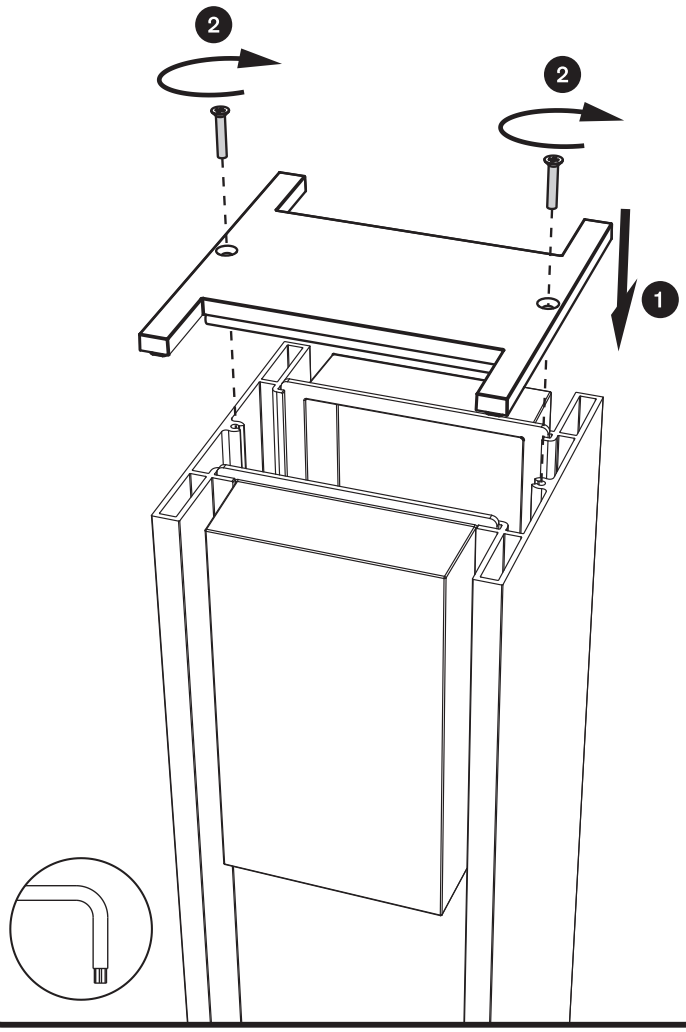

12

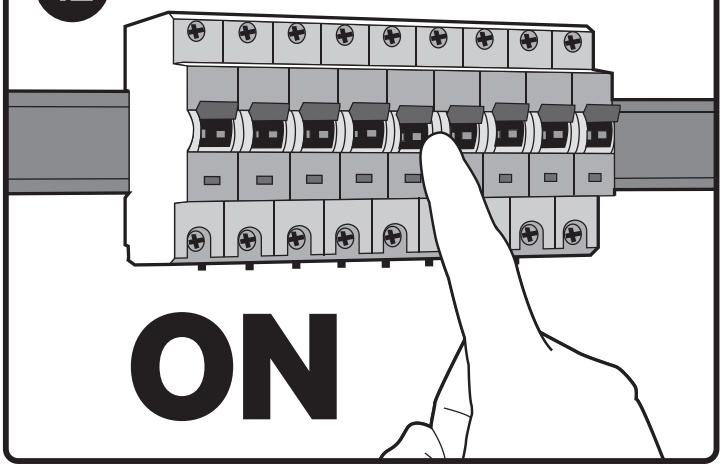

13

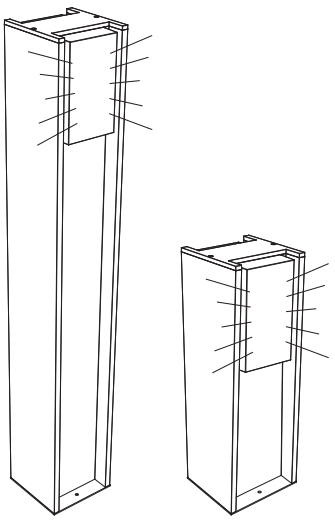

!

?

www.philips-hue.com/support

14

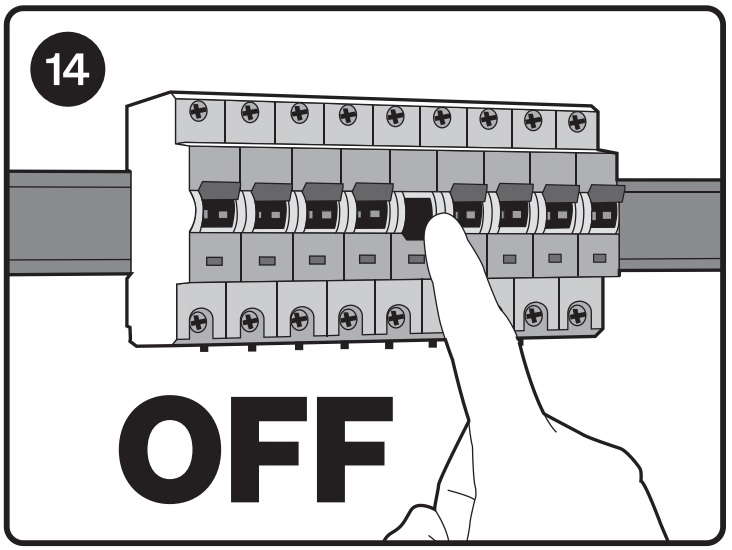

15

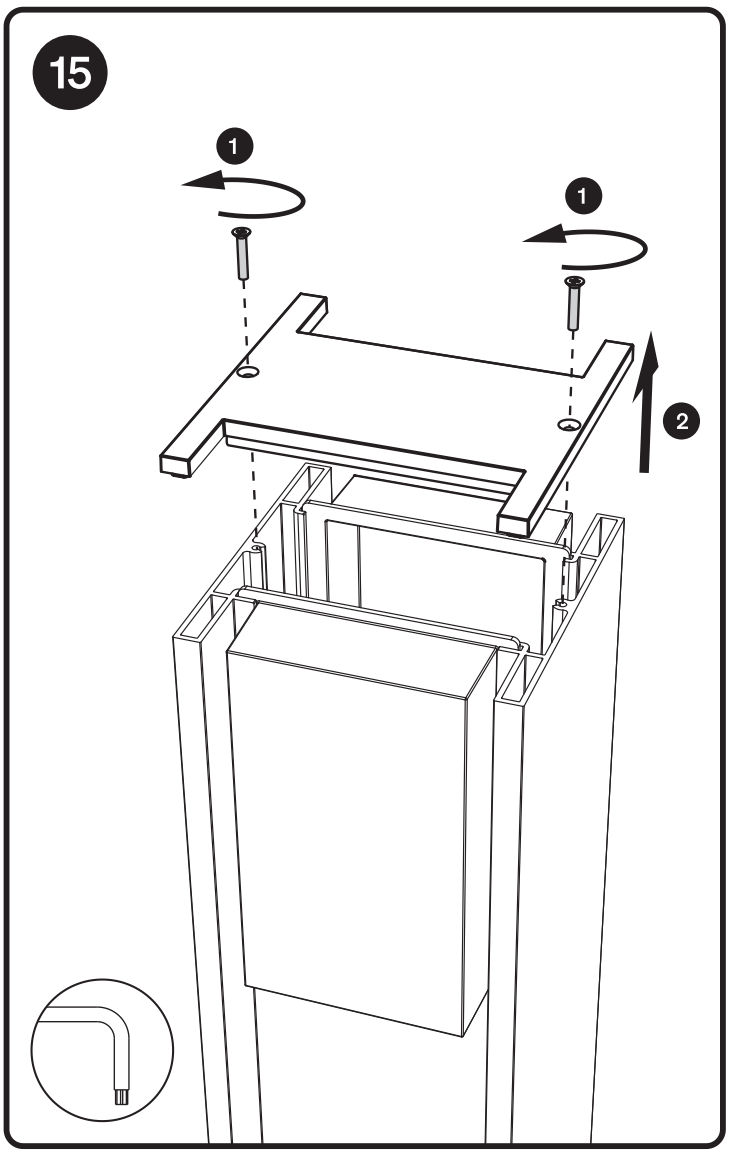

16

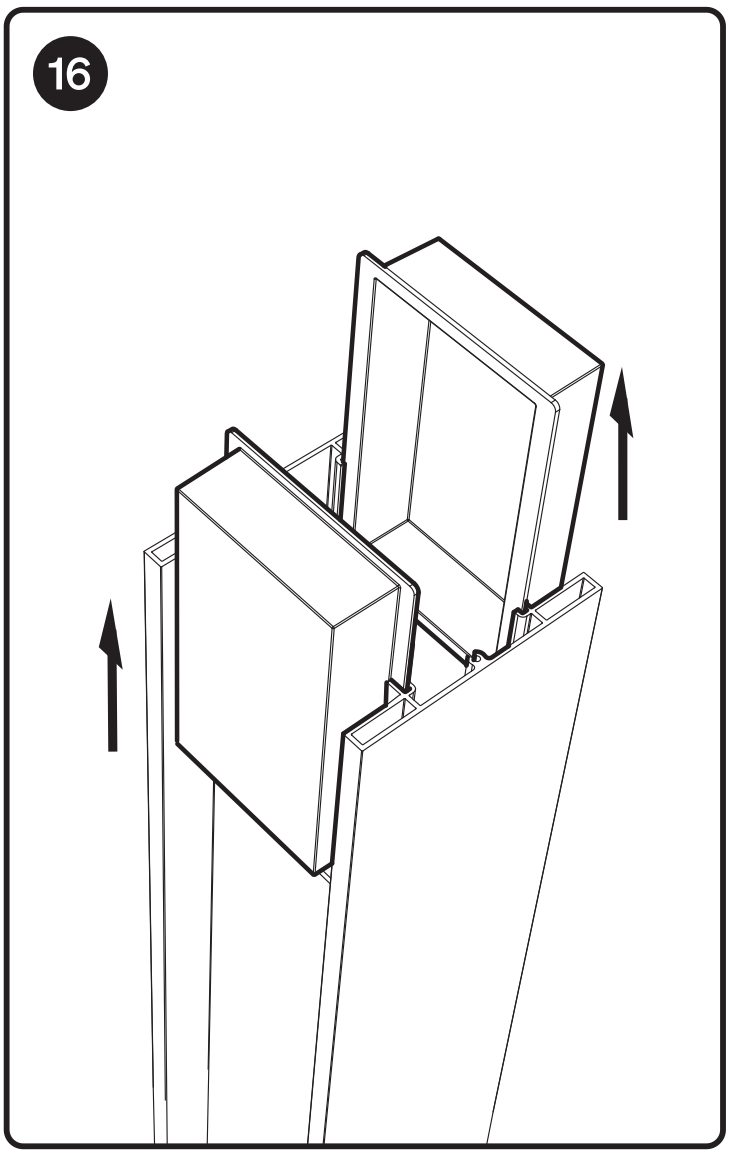

17

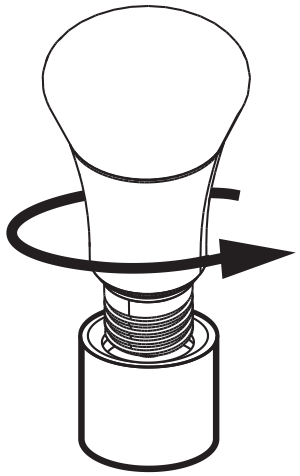

18



19

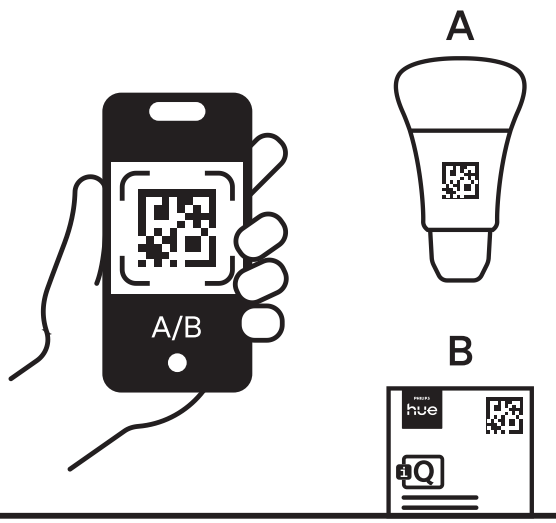

20

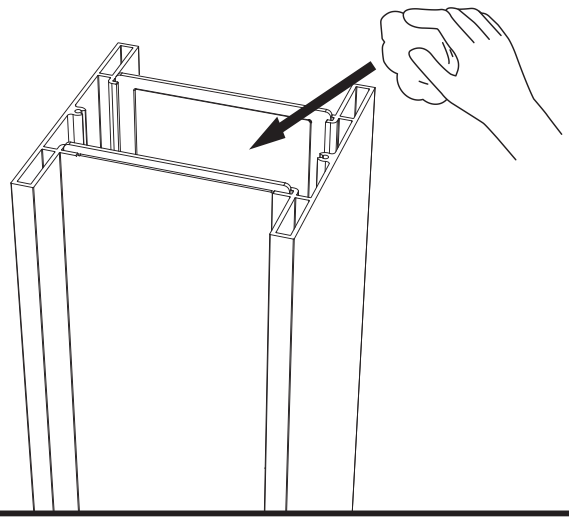

21

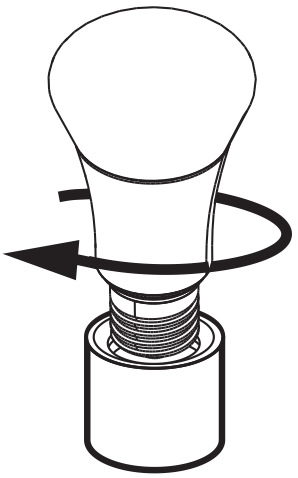

22

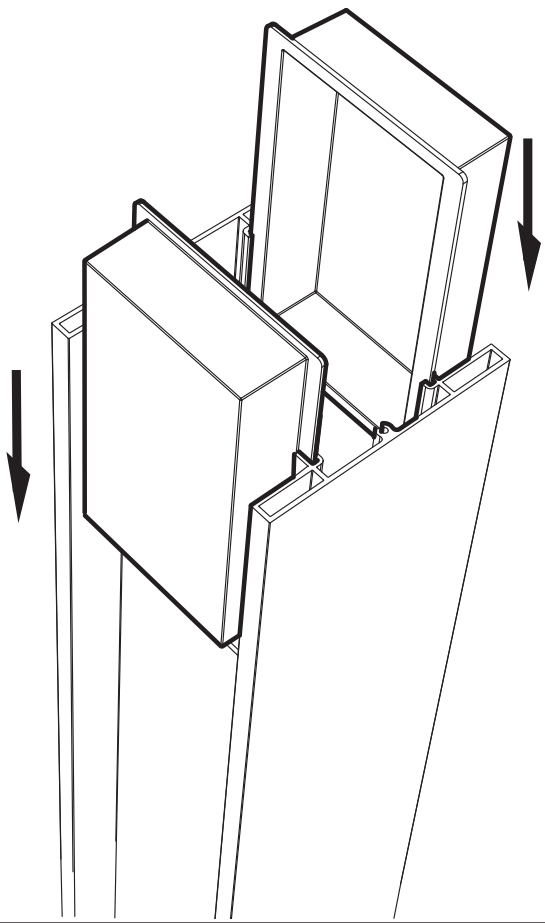

23

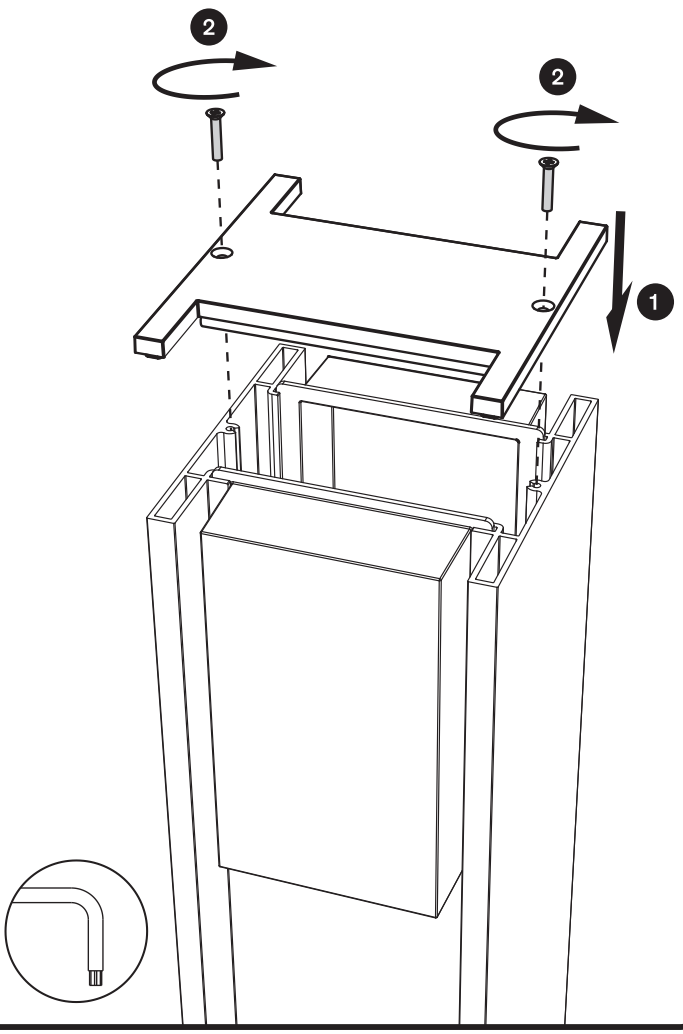

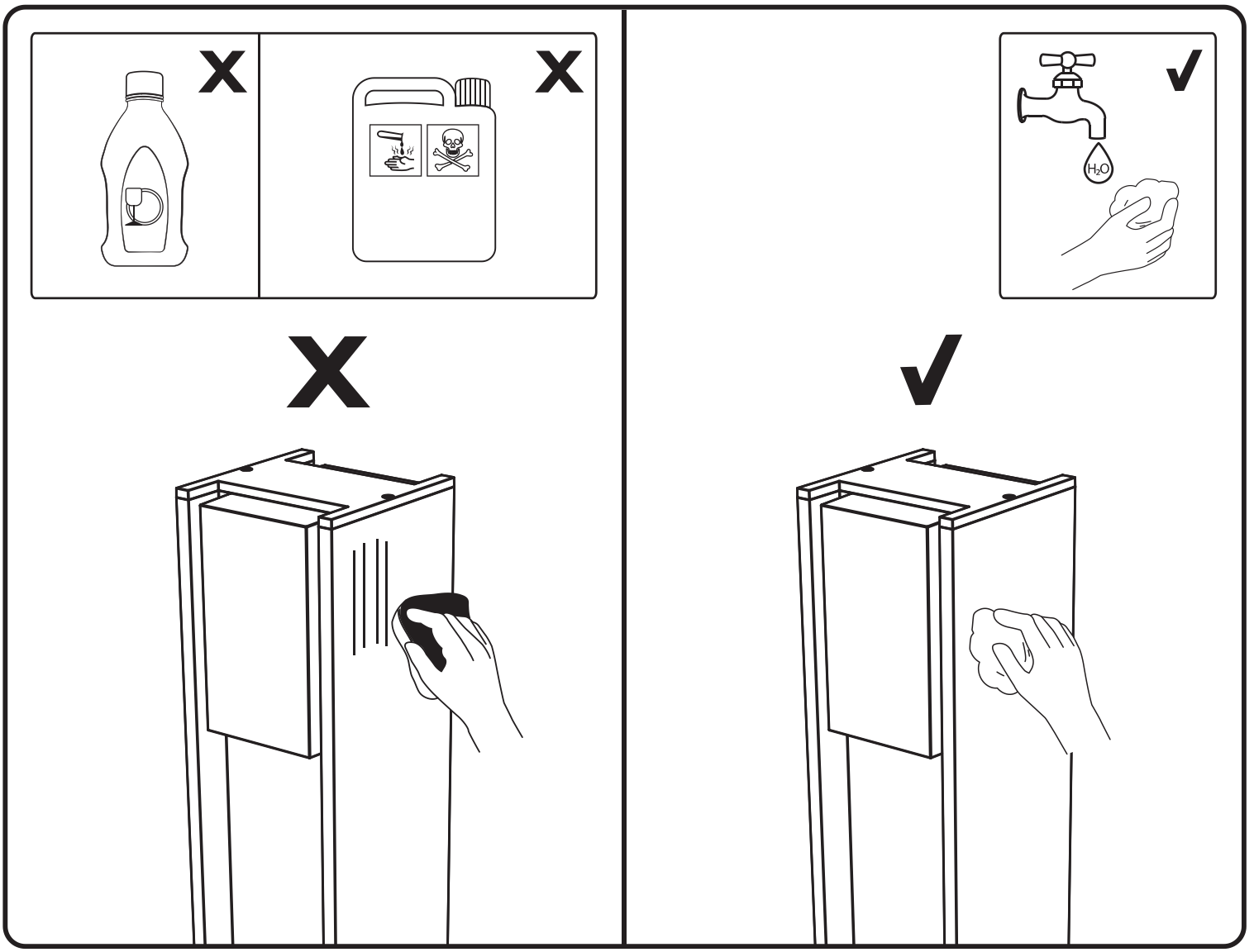
X
X
X
✓
H_2O
✓

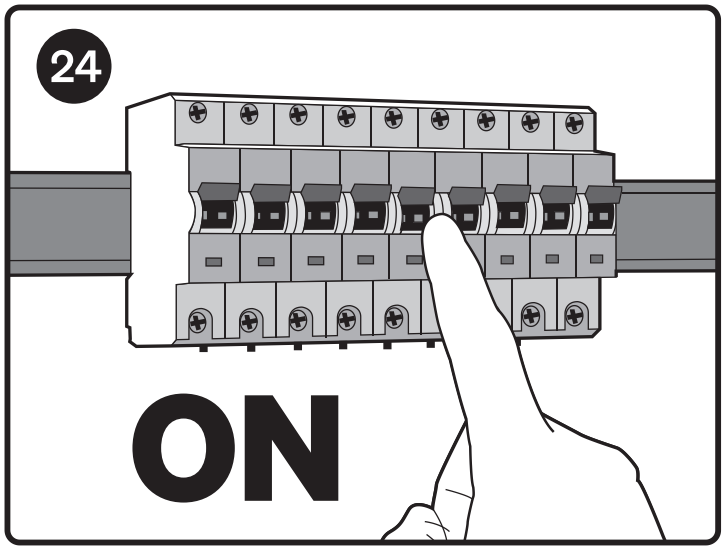
24
ON

Signify
I.B.R.S. / C.C.R.I. Numéro 10461
5600 VB Eindhoven,
the Netherlands
00800-74454775

© 2025 Signify Holding
All rights reserved

Last update: 10/2025

www.philips-hue.com

442280046521